Playtower combination

Device line Eco

Article 54600

Playtower combination made of multi-glued Swiss pine, pressure impregnated, platform height 150 cm, with gable roof, rung ascent, climbing wall, bent metal ladder, slide made of polyester red/yellow, swing section made of hot-dip galvanised tubular steel, stainless steel suspension device for one seat, incl. steel foot brackets for minimum installation depth 50 cm.



CHF 7'295.-
(excl. VAT)

Age group	3+
Device dimensions	483 x 478 x 340 cm
Space required	833 x 617 cm
min. impact surface	42.05 m^2
Fall height	150 cm
Heaviest element	145 kg
Biggest element	118 x 145 x 340 cm
Foundations	10
Concrete	1.3 m^3
Assembly time	4 h
Installers	2

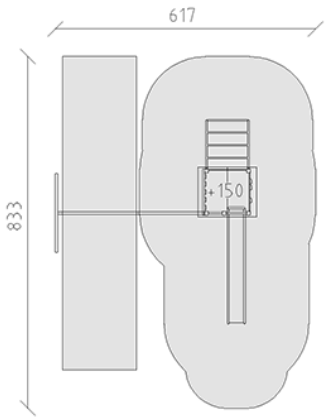

+41 41 925 14 00
info@buerli.swiss